MARKER CODE				

STUDENT ENROLMENT NUMBER (SEN)									

TONGA FORM SIX CERTIFICATE 2019

DESIGN TECHNOLOGY

QUESTION AND ANSWER BOOKLET

Time allowed: 3 Hours

INSTRUCTIONS:

1. Write your **Student Enrolment Number (SEN)** on the top right-hand corner of this page.
2. This examination has **FIVE MAJOR AREAS**. Each **AREA** is out of 70 weighted scores.
3. Answer **ONLY ONE MAJOR AREA**. **DO NOT** answer ALL THE MAJOR AREAS.

MAJOR AREAS		TOPICS	TOTAL SKILL LEVEL
MAJOR AREAS	**Please √ choice**	**OPTIONAL QUESTIONS** Choose **ONE** (Major 1 – Major 5)	
1		**WOOD TECHNOLOGY**	**70**
2		**METAL TECHNOLOGY**	
3		**FOOD TECHNOLOGY**	
4		**TEXTILES AND GARMENT CONSTRUCTION**	
5		**TECHNICAL GRAPHICS**	
		TOTAL	**70**

4. Answer ALL QUESTIONS. Write your answers in the spaces provided in this booklet.
5. Use a **BLUE** or **BLACK** ball point pen only for writing. Use a pencil for drawing if required.
6. If you need more spaces for answers, ask the supervisor for extra paper. Write your **Student Enrolment Number (SEN)** on each additional sheet, number the questions clearly and insert them in the appropriate places in this booklet.
7. Check that this booklet contains pages 2-75 in the correct order and that none of the pages is blank.

YOU MUST HAND IN THIS BOOKLET TO THE SUPERVISOR BEFORE YOU LEAVE THE EXAMINATION ROOM.

MAJOR AREA 1: WOOD TECHNOLOGY

A. MULTIPLE CHOICE QUESTIONS:

Circle the letter of the **BEST** answer.

1. State the factors affecting the hardness of timber.

Skill level 1	
1	
0	
NR	

A. Strength and elasticity.
B. Toughness and durability.
C. Wall thickness and size of cells.
D. Colouring and shape of cells.

2. Identify the manufactured materials that has uniform strength in both directions.

Skill level 1	
1	
0	
NR	

A. Hardwood.
B. Particle board.
C. Masonite.
D. Plywood.

3. Identify which of the following hand tools is a cutting tool.

Skill level 2	
2	
1	
0	
NR	

A. Try Square.
B. Wood Chisel.
C. Sliding Bevel.
D. Claw Hammer.

4. State which of the following hand tools is used for testing for squareness.

Skill level 2	
2	
1	
0	
NR	

A. Try Square.
B. Marking Gauge.
C. Straight Edge.
D. Wood Chisel.

5. State the correct name for the hand tool given below:

Skill level 1	
1	
0	
NR	

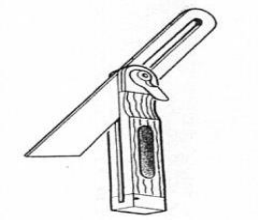

A. Try Square.
B. Marking Gauge.
C. Straight Edge.
D. Slighting Bevel.

6. Identify the Stage of the design process where ***"Repair task"*** takes place.

Skill level 1	
1	
0	
NR	

A. Investigating.
B. Devising.
C. Making.
D. Evaluating.

7. Identify the Stage of the design process where ***"Note expectations about the solution"*** takes place.

Skill level 1	
1	
0	
NR	

A. Investigating.
B. Devising.
C. Making.
D. Evaluating.

8. Identify the Stage of the design process where ***"Think about the outcome"*** takes place.

Skill level 1	
1	
0	
NR	

A. Investigating.
B. Devising.
C. Making.
D. Evaluating.

B. SHORT AND LONG ANSWER QUESTIONS.

Answer ALL the questions that follow.

1. **Design**

a. Explain what is involved in the investigating stage of the design process of your project that you used in your Internal Assessment (IA) this year.

Skill level 3	
3	
2	
1	
0	
NR	

b. Explain what is involved in the making stage of the design process of your project that you used in your Internal Assessment (IA) this year.

Skill level 3	
3	
2	
1	
0	
NR	

2. **Manufactured Materials & Manufacturing Process**

a. Name the appropriate uses of the following manufactured materials.

i. Veneers Board.

Skill level 1	
1	
0	
NR	

ii. Masonite.

Skill level 1	
1	
0	
NR	

b. Briefly explain the processes for manufacturing of Particle Board.

Skill level 3	
3	
2	
1	
0	
NR	

c. Briefly explain the processes for manufacturing of Plywood.

Skill level 3	
3	
2	
1	
0	
NR	

3. **Characteristics and Properties of Timber**

a. Briefly explain the moisture content of Timber.

Skill level 3	
3	
2	
1	
0	
NR	

Seasoning of Timber & Defect

b. Dry rot is caused by fungal attack on timber. State **ONE** (1) condition that is necessary for a fungal attack to occur.

Skill level 1	
1	
0	
NR	

The diagram shows a common defect in timber

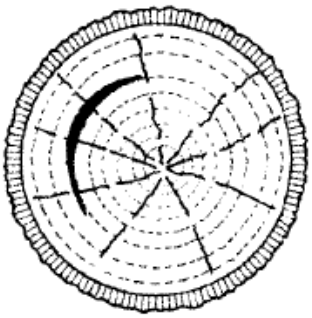

c. Give the correct name for this defect.

Skill level 1	
1	
0	
NR	

d. State the common cause of this defect.

Skill level 2	
2	
1	
0	
NR	

e. Discuss the natural or air seasoning process.

Skill level 4	
4	
3	
2	
1	
0	
NR	

Preservation and Conversion of Timber

Skill level 1	
1	
0	
NR	

f. Name **ONE** (1) method of preserving and treatment of timber.

_____

g. Briefly explain the method of preserving and treatment of timber you named in part **f**.

_____

_____

_____

_____

_____

_____

_____

_____

_____

_____

Skill level 3	
3	
2	
1	
0	
NR	

h. There are two main methods of converting timber. They are Through and through (or Plain or Crown sawn) and Quarter sawn.

Briefly explain the Quarter sawn method of converting timber.

_____

_____

_____

_____

_____

_____

_____

_____

_____

_____

Skill level 3	
3	
2	
1	
0	
NR	

4. **Project**

Study the kitchen shelf below made from wood below and answer the following questions.

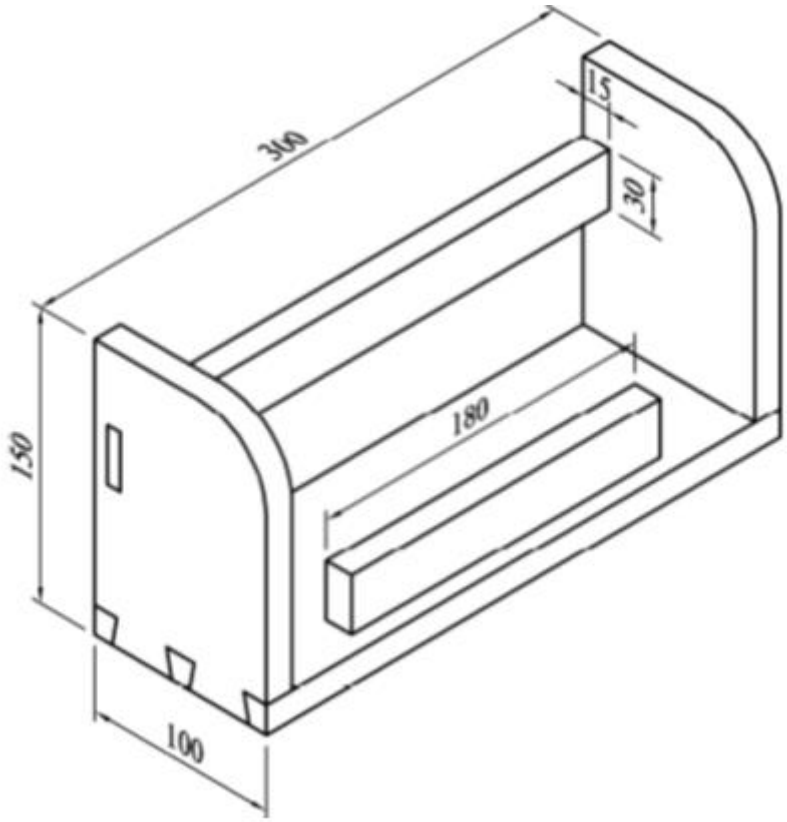

a. Complete the cutting list below for the shelf.

Table Parts	Quantity	Length	Width	Thickness
Base	1		100	15
Sides		150		15
Back Rail	1	300		
Front Rail	1		30	15

Skill level 3	
3	
2	
1	
0	
NR	

Suppose that the back rail and the sides is joined by through mortise & tenon joint.

b. List the steps of the process of construction of the joint

Skill level 2	
2	
1	
0	
NR	

c. List the tools needed for the construction of the joint.

Skill level 2	
2	
1	
0	
NR	

d. Explain why this type of joint is used to join the back rail and the sides.

Skill level 3	
3	
2	
1	
0	
NR	

5. **Tools and Equipment**

a. Describe the difference between hand and power tools.

_____

_____

_____

_____

_____

_____

Skill level 2	
2	
1	
0	
NR	

Planes

The Diagram shown below is a picture of a Jack Plane

b. State the appropriate use of the Jack Plane.

_____

_____

_____

_____

Skill level 1	
1	
0	
NR	

c. The diagram below shows the cutting assembly of a plane. Name the part labelled **X**.

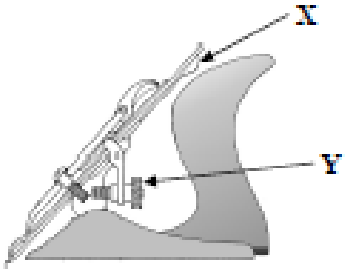

Part labelled **X**

Name: _____

Skill level 1	
1	
0	
NR	

The blade of the plane, which is shown, has been badly damaged.

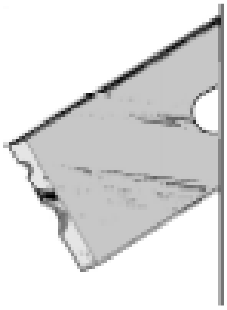

d. Discuss, in detail with aid of notes and freehand sketches, the steps involved in re-sharpening the cutting edge of the blade.

Skill level 4	
4	
3	
2	
1	
0	
NR	

6. **Woodturning Lathe**

The diagram below shows a woodworking lathe.

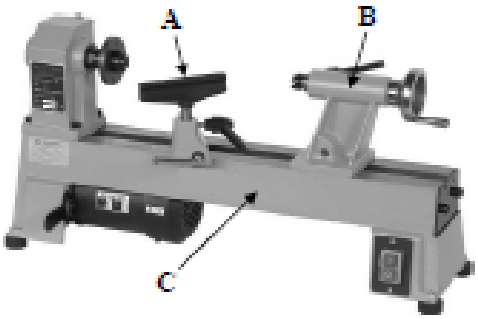

a. Name the parts of the lathe labelled **A** and **B**.

Skill level 1	
1	
0	
NR	

Part A

Name: _____

Skill level 1	
1	
0	
NR	

Part B

Name: _____

b. The diagram below shows a table lamp turned from wood.

Explain in detail, and with the aid of notes and neat freehand sketches, how a hole could be formed in the body of the lamb to accommodate the electrical cable.

_____

_____

_____

Skill level 4	
4	
3	
2	
1	
0	
NR	

7. **Timber Finishing**

The diagram below shows a wooden garden bench.

Skill level 1	
1	
0	
NR	

a. Name **ONE** (1) tool used for applying the timber finishes.

b. Suppose stain and vanish is used as finishes for the wooden garden bench.

Briefly explain the correct way of applying the stain and vanish as a timber finishes for the wooden garden bench.

Skill level 3	
3	
2	
1	
0	
NR	

MAJOR AREA 2: METAL TECHNOLOGY

A. MULTIPLE CHOICE QUESTIONS:

Circle the letter of the **BEST** answer.

1. Identify from the following an example of non-ferrous metal.

   A. Cast iron.
   B. Brass.
   C. Steel.
   D. Copper.

Skill level 1	
1	
0	
NR	

2. Identify from the following an example of ferrous metal.

   A. Aluminium
   B. Brass
   C. Steel
   D. Copper

Skill level 1	
1	
0	
NR	

3. State how the metals are to be connected to each other in spot welding.

   A. Electric contact
   B. Magnetic field
   C. Mechanical pressure
   D. Direct contact

Skill level 1	
1	
0	
NR	

4. Identify the Oxy-acetylene process as most suited for which of the following process of joining.

   A. Metal wires
   B. Metal sheets
   C. Metal tubes
   D. Metal bars

Skill level 1	
1	
0	
NR	

5. Name the amount of current required to generate the arc under no load condition.

   A. Short circuit current
   B. Closed circuit current
   C. Open circuit current
   D. Arc current

Skill level 1	
1	
0	
NR	

6. Identify the forging process that is ideal for longer shapes where only one end needs to be forged.

Skill level 1	
1	
0	
NR	

A. Drawing.
B. Upsetting.
C. Wages.
D. Forging.

7. State the correct name for the forging tool given below.

Skill level 1	
1	
0	
NR	

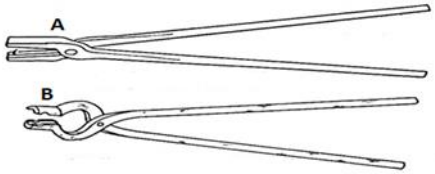

A. Anvil.
B. Gauge
C. Tongs
D. Swages.

8. Identify the Stage of the design process where ***"Repair task"*** takes place.

Skill level 1	
1	
0	
NR	

A. Investigating.
B. Devising.
C. Making.
D. Evaluating.

9. Identify the Stage of the design process where ***"Note expectation about the solution"*** takes place.

Skill level 1	
1	
0	
NR	

A. Investigating.
B. Devising.
C. Making.
D. Evaluating.

10. Identify the Stage of the design process where ***"Think about the outcome"*** takes place.

Skill level 1	
1	
0	
NR	

A. Investigating.
B. Devising.
C. Making.
D. Evaluating.

C. SHORT AND LONG ANSWER QUESTIONS.

Answer ALL the questions that follow.

1. **Design**

a. Explain what is involved in the investigating stage of the design process of your project that you used in your Internal Assessment (IA) this year.

Skill level 3	
3	
2	
1	
0	
NR	

b. Explain what is involved in the making stage of the design process of your project that you used in your Internal Assessment (IA) this year.

Skill level 3	
3	
2	
1	
0	
NR	

2. **Workshop and Personal Safety**

a. Identify **ONE** (1) workshop safety.

Skill level 1	
1	
0	
NR	

b. Identify **ONE** (1) personal safety.

Skill level 1	
1	
0	
NR	

c. Describe the personal safety you mentioned in part c.

Skill level 2	
2	
1	
0	
NR	

d. Explain the correct ways for storing tools and equipment

Skill level 3	
3	
2	
1	
0	
NR	

3. **Metal Classification & Molecular Structure**

a. Name **ONE** (1) process applied in producing metal.

Skill level 1	
1	
0	
NR	

b. Describe the process applied in producing metal you named in part a.

Skill level 2	
2	
1	
0	
NR	

c. Evaluate the process applied in producing metal you named in part a.

Skill level 4	
4	
3	
2	
1	
0	
NR	

d. Compare ferrous and non-ferrous metal.

Skill level 3	
3	
2	
1	
0	
NR	

e. Compare the Simple cubic structure and the body-centered cubic structure of metal.

Skill level 3	
3	
2	
1	
0	
NR	

f. Evaluate the molecular structure of metals.

Skill level 4	
4	
3	
2	
1	
0	
NR	

4. **Characteristics of Metal**

Skill level 1	
1	
0	
NR	

a. Name **ONE** (1) Mechanical property of metal

_____

b. Describe the mechanical property of metal you named in part a.

_____
_____
_____
_____
_____
_____
_____
_____

Skill level 2	
2	
1	
0	
NR	

c. Classify the property of metal

_____
_____
_____
_____
_____
_____
_____
_____
_____
_____
_____
_____
_____
_____
_____

Skill level 3	
3	
2	
1	
0	
NR	

d. Evaluate the properties of Stainless Steel where most cooking utensils are made out of.

Skill level 4	
4	
3	
2	
1	
0	
NR	

5. **Forging Process and Effect of heat treatment on metals.**

a. State the name of the forging tool given below.

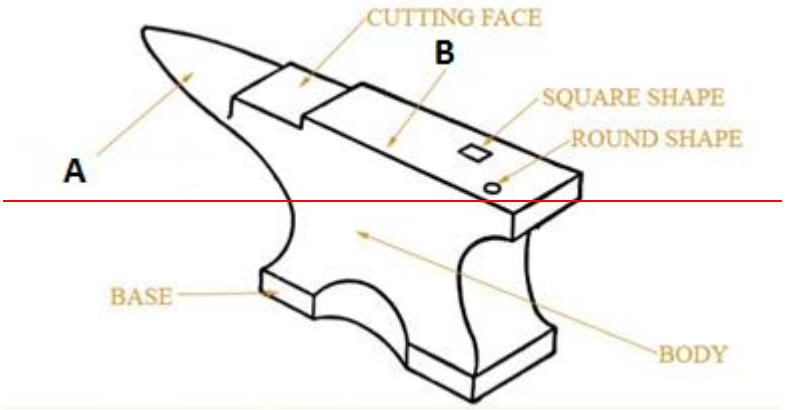

Name: _____

Skill level 1	
1	
0	
NR	

b. Identify the use of the forging tool given in part a.

_____

_____

_____

_____

_____

Skill level 1	
1	
0	
NR	

c. Explain the uses of appropriate forging process for drawing.

_____

_____

_____

_____

_____

_____

_____

_____

_____

_____

Skill level 3	
3	
2	
1	
0	
NR	

d. Describe the use of heat in the process of annealing metals.

Skill level 2	
2	
1	
0	
NR	

e. Compare the use of heat in the process of tempering and stress relieving of metal.

Skill level 3	
3	
2	
1	
0	
NR	

6. **Use of tools, equipment, fasteners & welding**

a. Explain the use of Vernier Calliper as a measuring tool.

Skill level 3	
3	
2	
1	
0	
NR	

b. Describe the uses of Guillotine.

Skill level 2	
2	
1	
0	
NR	

c. Describe the uses of soldering as fasteners.

Skill level 2	
2	
1	
0	
NR	

d. Explain the appropriate welding processes when using oxy-acetylene.

Skill level 3	
3	
2	
1	
0	
NR	

MAJOR AREA 3: FOOD TECHNOLOGY

SECTION A: MULTIPLE CHOICE QUESTIONS

Circle the letter of the **BEST** answer.

1. Carbohydrate is essential for health because _____

Skill level 1	
1	
0	
NR	

A. it builds up body cells & new tissues.
B. it transports fat-soluble vitamins.
C. in it's simple form, it provides energy.
D. for maintenance, it repairs broken body cells.

2. In order for nutrients to be used by the body, food must first be broken down into the stage where nutrients are available. The nutrients then pass through the membrane of the small intestine into the blood stream. This passing through is called _____

Skill level 1	
1	
0	
NR	

A. Digestion
B. Absorption
C. Assimilation
D. Oxidation

3. Micro nutrients are _____

Skill level 1	
1	
0	
NR	

A. provided by the digestion process.
B. those that the body can store.
C. needed by the body in very small amounts.
D. the insoluble nutrients that must be prepared carefully.

4. Identify the given nutritional disease where there is high blood sugar level in the body over a prolonged period.

Skill level 1	
1	
0	
NR	

A. Diabetes
B. Obesity
C. Hypertension
D. Undernutrition

5. Which of the following occurs when raw meat, poultry, seafood and eggs come in contact with ready-to-eat foods like bread and vegetables.

Skill level 1	
1	
0	
NR	

A. Cross contamination
B. Natural decaying
C. Food spoilage
D. Food deterioration

6. Freezers should be kept at a temperature of _____ °C, to ensure quality of the food stored.

Skill level 1	
1	
0	
NR	

A. 0
B. -2
C. -18
D. 75

7. Identify which one of the following makes sure that food is handled and prepared safely.

Skill level 1	
1	
0	
NR	

A. 4 servings of cooked meat are left on the bench to cool before serving together
B. Hot food needs to be kept and served hot (60°C) to inhibit the growth of bacteria.
C. A wet oven mitt is used to remove a hot baking tray from the oven.
D. Knives can be used blunt to prevent you cutting yourself.

8. Hazards must be avoided and kept from happening in the kitchen when preparing food. State the meaning of Hazards.

Skill level 1	
1	
0	
NR	

A. A situation where someone who prepares food is injured.
B. The safety equipment necessary to perform specific activities.
C. Anything that is unsafe, unhealthy and that can and has the potential to harm someone.
D. They are the accidents that cause serious harm and results in death or loss of bodily functions.

9. Identify the stage of the design process where the designer clarifies the problem and the need of a customer to be solved.

Skill level 1	
1	
0	
NR	

A. Design
B. Investigate
C. Build
D. Evaluate

10. Identify the stage of the design process where you either go back and re-do or re-design the product or go on to exhibit your product.

Skill level 1	
1	
0	
NR	

A. Designing
B. Investigation
C. Making
D. Evaluation

SECTION B: SHORT ANSWER QUESTIONS

Answer ALL the questions that follow.

Use this diagram to answer questions 1 and 2.

The Human digestive system

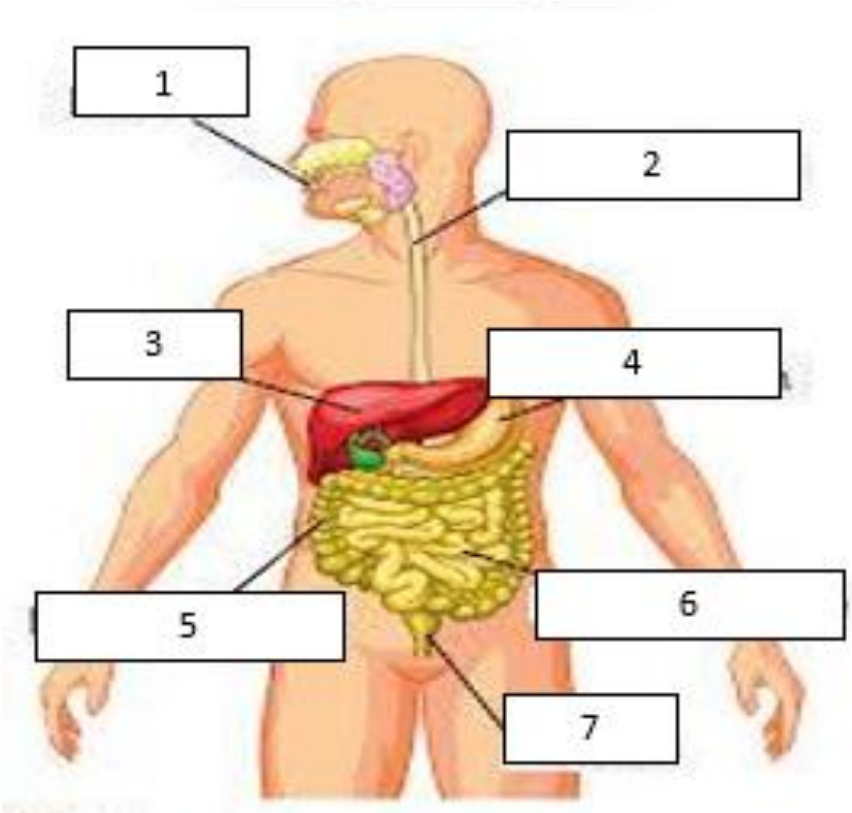

1. On the diagram given, number 1 is the mouth and number 7 is the rectum. Name any two numbers from 2 – 6.

	Numbers	**Name**
i.		
ii.		

Skill level 1	
1	
0	
NR	

2. Identify the number and body part where waste matter collects and enters to and through the Rectum.

Skill level 1	
1	
0	
NR	

_____

3. Children grow very fast during the childhood period of their life.

   a. Identify **TWO** (2) nutrients children need in relatively large amounts due to their fast growth in height as well as in weight.

Skill level 1	
1	
0	
NR	

   i. _____

   ii. _____

   b. Describe **TWO** (2) other factors that you should consider when planning meals for children and give examples.

_____

_____

_____

_____

_____

_____

_____

_____

_____

_____

_____

Skill level 2	
2	
1	
0	
NR	

4. 'Ofa, a form 6 student wants to pursue a career in Food Preparation. She has a Practical Test (Internal Assessment) today. However, she was late in waking up and has cut her finger as she opened a tin of peaches for breakfast. She does her hair quickly and rushed to take all her food ingredients but forgets the ring on her finger. She gladly got to class on time for the Practical Assessment.

   a. List at least **THREE** (3) types of careers in the field of cookery 'Ofa could have when she graduates.

      1. _____
      2. _____
      3. _____

Skill level 1	
1	
0	
NR	

   b. Describe any **TWO** (2) of the personal hygienic practices 'Ofa needs to demonstrate as she prepares and takes her Test.

      1. _____
      _____
      _____
      2. _____
      _____
      _____

Skill level 2	
2	
1	
0	
NR	

5. Identify **TWO** (2) safety issues you as a consumer should look for when shopping for canned or tinned food.

   1. _____
   2. _____

Skill level 1	
1	
0	
NR	

6. Study the following diagram and answer the questions that follow.

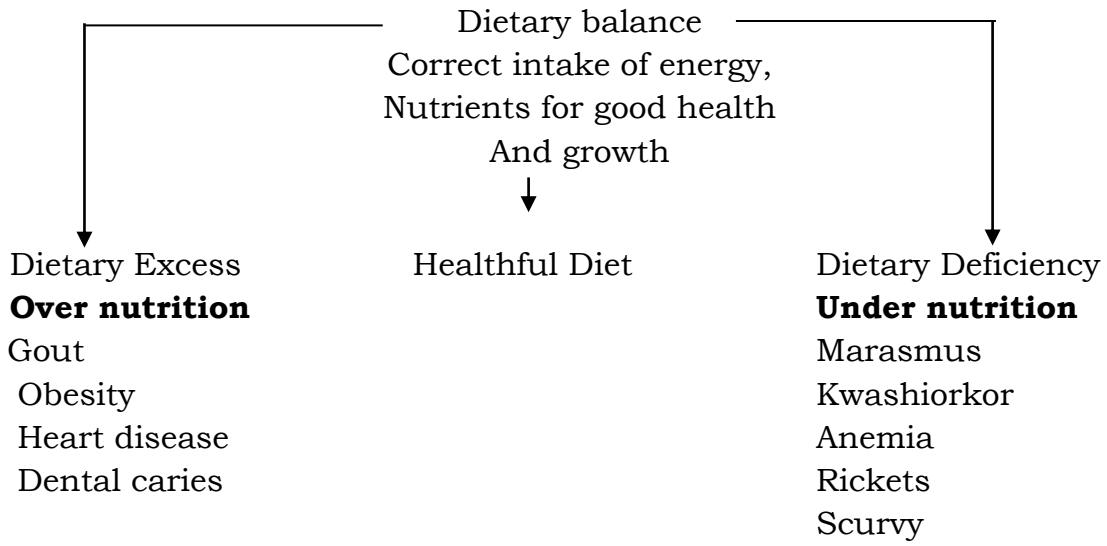

a. Define Mal-Nutrition.

Skill level 1	
1	
0	
NR	

b. Analyse the above diagram to show the base of nutritional needs of our community. You must give clear dietary examples in your discussion.

Skill level 3	
3	
2	
1	
0	
NR	

7. Complete this table of Micro Nutrients by giving the
   a. micro nutrients

Skill level 2	
2	
1	
0	
NR	

Skill level 2	
2	
1	
0	
NR	

   b. and their food sources.

a. MICRO NUTRIENTS			**b. FOOD SOURCES**
1.	1.	i.	
		ii.	
		iii.	
		iv.	
	2.	i.	
		ii.	
		iii.	
2.	1.		
	2.		
	3.		
	4.		

8. Moana, a form 6 student from Ha'apai prepared these foods in her practical assessment. The foods were chicken breast and milk for a white sauce, and she also had cheese to grate and broccoli to cook.

   a. List the high risk foods Moana used for her practical food assessment.

   _____

   _____

   _____

   _____

   _____

   _____

   _____

   _____

Skill level 2	
2	
1	
0	
NR	

   b. Explain any management strategies Moana needed to have carried out to avoid food poisoning risks during the storage, preparation, timing and service of one of the above high risk foods.

   Storage_____

   _____

   _____

   _____

   Preparation_____

   _____

   _____

   _____

   Timing_____

   _____

   _____

   _____

   Service_____

   _____

   _____

   _____

Skill level 3	
3	
2	
1	
0	
NR	

9. Think of your Design Project this year.

   a. State why it is important that you complete the investigation stage.

Skill level 2	
2	
1	
0	
NR	

   b. Clearly explain all that you did during the producing stage of your designing project.

Skill level 3	
3	
2	
1	
0	
NR	

10. Explain clearly with reference to your project, why it is important that you consult the previous stage of the Design Process.

Skill level 3	
3	
2	
1	
0	
NR	

SECTION C: EXTENDED RESPONSE QUESTIONS

Answer ALL the questions that follow. Write your answers in the spaces provided.

1. Choose any two of these nutrients; Carbohydrates, Fats and Protein, and answer the given questions. With reference to the Human Digestive System DIAGRAM on this paper, in **SECTION B page 31**, clearly explain with examples how the nutrients you chose are Digested at each stage of Digestion.

   a. Nutrient Choice 1: _____

Skill level 3	
3	
2	
1	
0	
NR	

   b. Nutrient Choice 2: _____

Skill level 3	
3	
2	
1	
0	
NR	

c. Discuss the functions of the above chosen nutrients in the body.

Skill level 4	
4	
3	
2	
1	
0	
NR	

2. Study this food poisoning chain and answer the questions that follow.

The food poisoning chain.

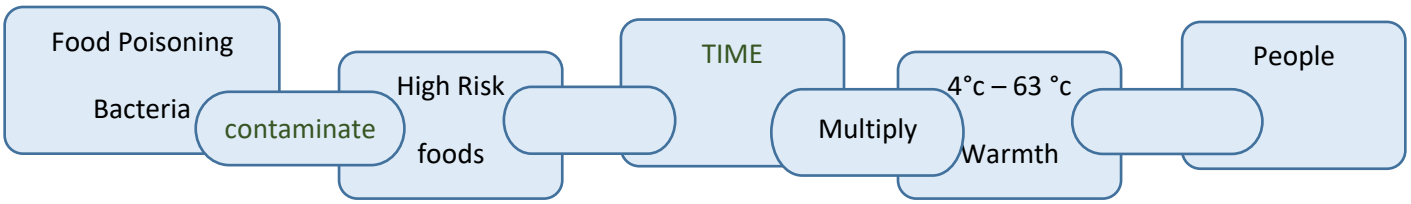

a. There are three main ways of breaking this food poisoning chain: Identify and describe the **THREE** (3) factors.

i. _____

_____

_____

ii. _____

_____

_____

iii. _____

_____

_____

Skill level 3	
3	
2	
1	
0	
NR	

b. Explain how each of these **THREE** (3) factors could be used to break the food poisoning chain.

i. _____

_____

_____

ii. _____

_____

_____

i. _____

_____

_____

Skill level 3	
3	
2	
1	
0	
NR	

3. The following story shows a typical way food poisoning from Salmonella can occur.

Suliana realized in the morning that she had forgotten to take out the frozen chicken that she hoped to serve for lunch. She put the chicken into a sink of hot water for two hours. She then flushed out most of the ice from inside of the chicken and stuffed it. Suliana was relieved to find that the flesh of the chicken looked well cooked and she served up the chicken confidently. Everyone liked the flavor of her stuffing. However, she and her guests were feeling very ill the next day with severe headaches, abdominal pains and diarrhea and vomiting.

Discuss what Suliana did wrong in the above story.

Skill level 4	
4	
3	
2	
1	
0	
NR	

4. a. Your one Practical Internal Assessment this year was an investigation into and making a meal that could help out someone with a nutritional related disease.

Write an evaluation of the meal you prepared.

Nutritional Disease: _____

Meal Menu: _____

Skill level 4	
4	
3	
2	
1	
0	
NR	

b. Explain clearly in organized steps, the production processes you went through.

Skill level 3	
3	
2	
1	
0	
NR	

c. During your practical assessment, you faced several problems.

Explain how you faced those barriers of personal hygiene, kitchen hygiene and food hygiene, in order to be safe.

Skill level 3	
3	
2	
1	
0	
NR	

MAJOR AREA 4: TEXTILES AND GARMENT CONSTRUCTION

SECTION A: MULTIPLE CHOICE QUESTIONS

Circle the letter of the **BEST** answer.

1. Cotton fiber smells like _____ when it is burning.

Skill level 1	
1	
0	
NR	

A. plastic
B. paper
C. hair
D. rubber

2. The most important factor to consider when selecting baby clothing is the fabric's

Skill level 1	
1	
0	
NR	

A. comfortability.
B. shine.
C. coolness.
D. beauty.

3. The shortest natural fiber used in the commercial textile industry is _____.

Skill level 1	
1	
0	
NR	

A. Polyester
B. Cotton
C. Silk
D. Wool

4. The basic elements of design that we use in designing includes _____.

Skill level 1	
1	
0	
NR	

A. Texture, line, form and machine
B. Shape, line, form and balance
C. Colour, texture, pattern and line
D. Colour, shape, pattern and fabric

5. A complementary colour scheme is formed when _____.

Skill level 1	
1	
0	
NR	

A. using colours opposite each other on the colour wheel
B. using 3 hues from the colour wheel
C. using colours that are next to each other on the colour wheel
D. one colour is used by tinting or toning

6. When adding white to any colour or paint, it is called _____.

Skill level 1	
1	
0	
NR	

A. Toning
B. Tinting
C. Stippling
D. Hatching

7. The three universal primary colours are _____.

Skill level 1	
1	
0	
NR	

A. Red, green and yellow
B. Black, orange and red
C. Blue, green and purple
D. Red, yellow and blue

8. Identify which of the following tools would help ensure safety in the classroom when working with needles.

Skill level 1	
1	
0	
NR	

A. Scissors
B. Magnets
C. Pins
D. Nails

9. State which of the following are used to shape up garments to fit the body.

Skill level 1	
1	
0	
NR	

A. Hems
B. Cuffs
C. Darts
D. Linings

10. State which of these lists of body measurements determines your right pattern size.

Skill level 1	
1	
0	
NR	

A. Waist, hip and bust.
B. Hip, back and bust.
C. Neck, hip and arm.
D. Neck, bust and waist.

SECTION B: SHORT ANSWER QUESTIONS

Answer ALL the questions that follow.

1. **Body Measurements**

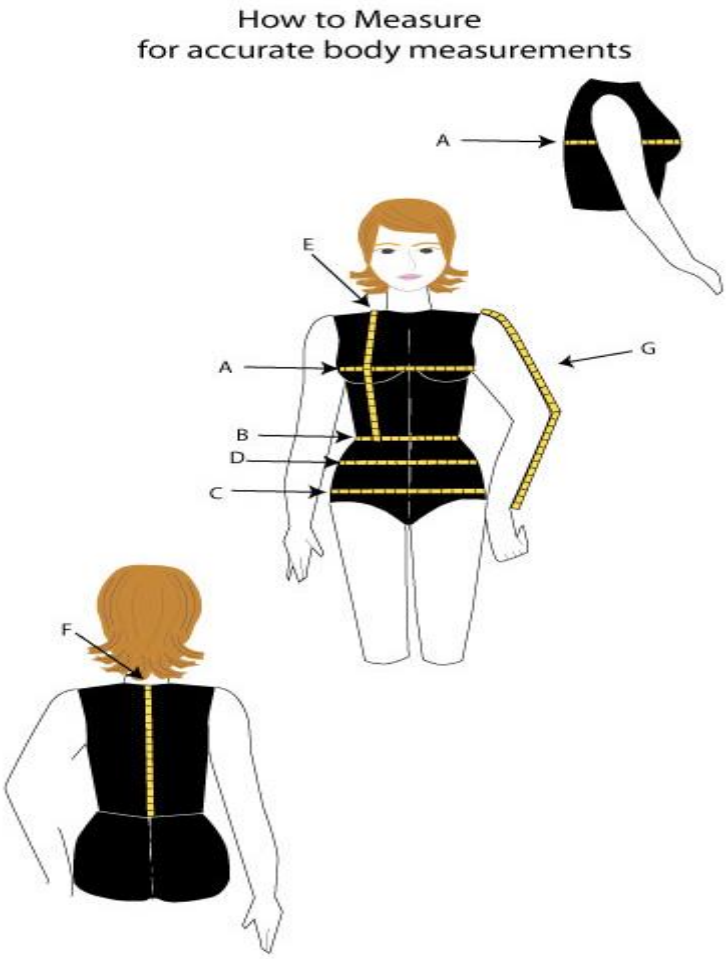

Label the parts identified on the given pictures.

A: _____

B: _____

C: _____

D: _____

E: _____

F: _____

G: _____

Skill level 2	
2	
1	
0	
NR	

2. Use the given block pattern diagram to answer the following questions.

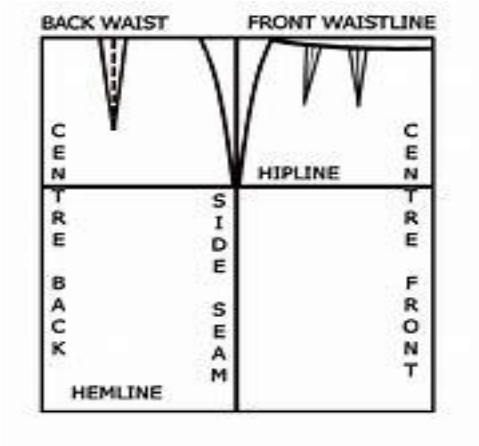

a. Sketch the front and back views of the skirt this pattern shows and label it clearly.

Skill level 4	
4	
3	
2	
1	
0	
NR	

b. On the given drawing, mark the place if a zipper is to be attached in the center back.

Skill level 1	
1	
0	
NR	

c. To include a zipper in the skirt, you must adjust the back piece so you can have 2 pieces. Show this by drawing the fabric and layout of the back pattern piece on it. Clearly label all necessary symbols.

Skill level 3	
3	
2	
1	
0	
NR	

d. If you include a belt and a pocket to the adjustment in part c for the skirt, state how many pieces altogether would you cut.

Skill level 2	
2	
1	
0	
NR	

_____

e. Name all of the pattern pieces you identified in d. above, for the skirt.

_____

_____

_____

_____

_____

Skill level 1	
1	
0	
NR	

3. Use this picture to answer the following questions.

a. How many pattern pieces does the blue view have?

Skill level 1	
1	
0	
NR	

b. Name them all.

Skill level 2	
2	
1	
0	
NR	

c. Based on your knowledge on Elements and Principles of design, compare and contrast the dress view blue and the dress view red.

Skill level 3	
3	
2	
1	
0	
NR	

4. The middle view has only 1 style and the other 2 have several.

a. Identify how many different styles can you sew from the 3rd pattern envelope.

Skill level 1	
1	
0	
NR	

b. Sketch the middle view with 3 different styles similar to it.

Skill level 3	
3	
2	
1	
0	
NR	

5. State the meaning of the following properties of cotton.

Skill level 1	
1	
0	
NR	

a. Absorbency

_____

Skill level 1	
1	
0	
NR	

b. Breathability

_____

6. Describe the nature of the cotton properties above and justify their uses.

a. Absorbency

_____
_____
_____
_____
_____
_____
_____
_____

Skill level 2	
2	
1	
0	
NR	

b. Breathability

_____
_____
_____
_____
_____
_____
_____
_____

Skill level 2	
2	
1	
0	
NR	

SECTION C: EXTENDED RESPONSE QUESTIONS

Answer ALL the questions that follow. Write your answers in the spaces provided.

1. Based on your project this year, choose one of the following sewing techniques and explain its functional and decorative use in your garment as well as identify this on a sketched diagram, where specifically you used it on your project.

   a. Staystitching
   b. Under stitching
   c. Ease stitching
   d. Hand basting

Skill level 3	
3	
2	
1	
0	
NR	

2. Identify the type of seam and the seam finish you used for your garment and explain why you chose them.

Skill level 3	
3	
2	
1	
0	
NR	

3. Differentiate between the following terms.

a. Ease stitching and Edge stitching

Skill level 3	
3	
2	
1	
0	
NR	

b. Trimming and Clipping

Skill level 3	
3	
2	
1	
0	
NR	

4. a. Describe the garment you designed this year and clearly sketch out the project with very clear labels.

Skill level 3	
3	
2	
1	
0	
NR	

b. Evaluate the dress and the processes you went through in it's construction.

Skill level 4	
4	
3	
2	
1	
0	
NR	

c. Discuss how you could improve on your garment and the fabric used if you do the project again.

Skill level 4	
4	
3	
2	
1	
0	
NR	

5. Write up the order you followed in putting together the pattern pieces for your garment. You may also use diagrams.

Skill level 3	
3	
2	
1	
0	
NR	

6. List the equipments you used and describe a problem you came across due to the equipment, it's use or misuse.

Skill level 2	
2	
1	
0	
NR	

7. Explain how you used at least 3 of the elements of design to design your project.

Skill level 3	
3	
2	
1	
0	
NR	

MAJOR AREA 5 : TECHNICAL GRAPHICS

A. MULTIPLE CHOICE QUESTIONS:

Circle the letter of the BEST answer.

1. Identify the type of drawing where 45° is use for projection.

Skill level 1	
1	
0	
NR	

A. Perspective drawing
B. Orthographic drawing
C. Isometric drawing
D. Oblique drawing

2. The line of intersection formed is curve while two solids intersect. State the solids.

Skill level 1	
1	
0	
NR	

A. Cone and Cylinder
B. Cube and Prism
C. Pyramid and Cube
D. Pyramid and Cuboid

3. When a solid completely penetrates another solid, there will be two lines of intersection. Name the lines.

Skill level 1	
1	
0	
NR	

A. Concyclic curves of lines
B. Line of interpenetration
C. Hidden lines
D. Line inside

4. State the line of axis of the cylinder or sphere.

Skill level 1	
1	
0	
NR	

A. Section line
B. Hidden line
C. Centre line
D. Leader line

5. Identify is the difference between the section line and the centre line.

Skill level 1	
1	
0	
NR	

A. The length of the long dashes.
B. The length of the short dashes.
C. The width of the gap.
D. The two ends of the lines.

6. Identify what stage of the design process where ***"Repair task"*** takes place?

Skill level 1	
1	
0	
NR	

A. Investigating
B. Devising
C. Making
D. Evaluating

7. Identify what Stage of the design process where ***"Note expectation about the solution"*** takes place.

Skill level 1	
1	
0	
NR	

A. Investigating
B. Devising
C. Making
D. Evaluating

8. Identify what Stage of the design process where ***"Think about the outcome"*** takes place.

Skill level 1	
1	
0	
NR	

A. Investigating
B. Devising
C. Making
D. Evaluating

B. SHORT AND LONG ANSWER QUESTIONS.

Answer ALL the questions that follow.

1. **Design**

a. Explain what is involved in the investigating stage of the design process of your project that you used in your Internal Assessment (IA) this year.

Skill level 3	
3	
2	
1	
0	
NR	

b. Explain what is involved in the making stage of the design process of your project that you used in your Internal Assessment (IA) this year.

Skill level 3	
3	
2	
1	
0	
NR	

2. **Standard Lines & Symbols**

a. Complete the Table below with name and application of the line types.

	Line Types	Line Application
i.	Continuous Thick Line	
ii.	*(gap 1, length 3 mm)*	Show outlines of hidden features
iii.	Continuous thin with zig-zag.	
iv.	*(Alternate long and short dashes in a proportion of 6:1)*	Center lines

Skill level 1	
1	
0	
NR	

Skill level 1	
1	
0	
NR	

Skill level 1	
1	
0	
NR	

Skill level 1	
1	
0	
NR	

b. Complete the table below by the naming the following technical drawing symbols.

	Technical Drawing Symbols	Name of the Technical Drawing Symbols
i.	Ø	
ii.		
iii.	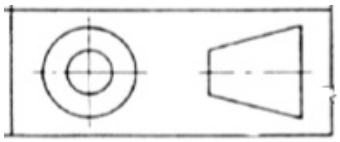	

Skill level 1	
1	
0	
NR	

Skill level 1	
1	
0	
NR	

Skill level 1	
1	
0	
NR	

3. **Interpenetration of Solid, Geometrical Construction**:

a. Complete the front view below showing the intersection of the cylinders. Show all construction lines.

Skill level 3	
3	
2	
1	
0	
NR	

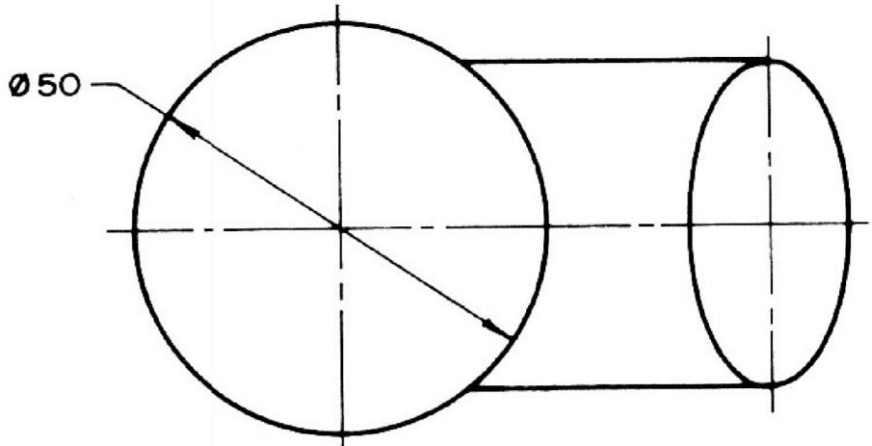

TOP VIEW

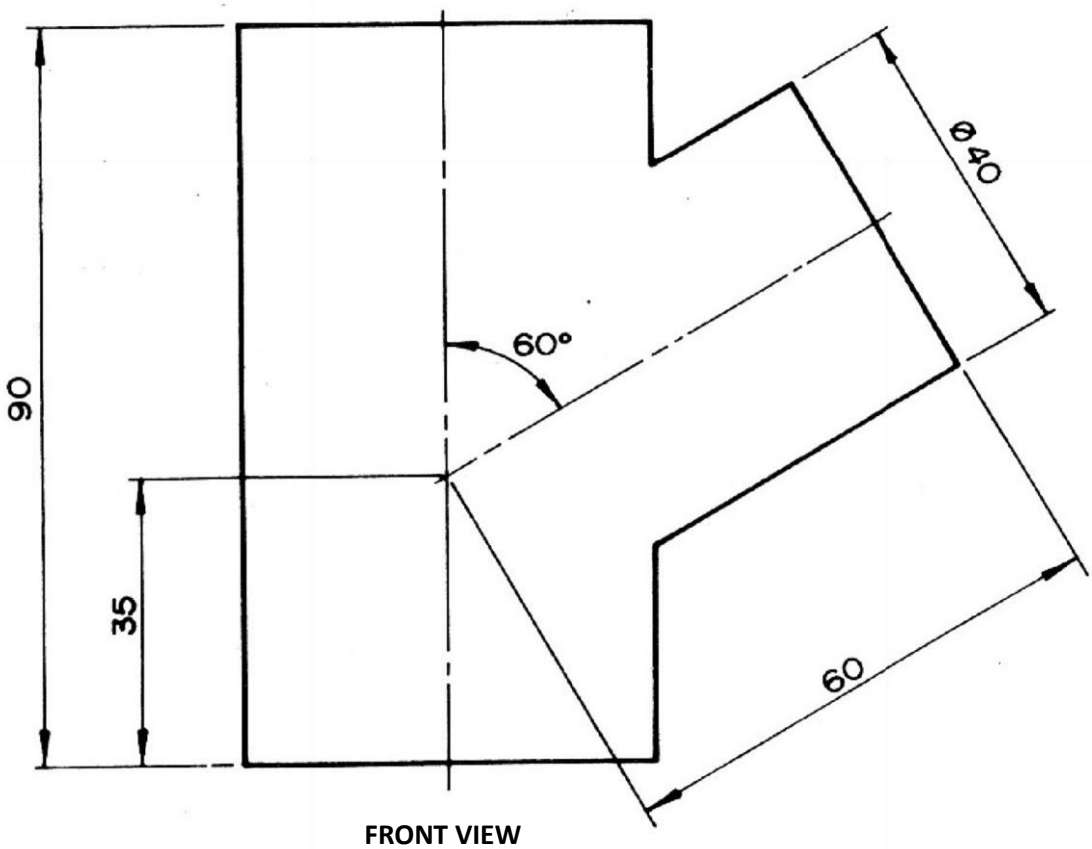

FRONT VIEW

b. Bisect angle ABC of the triangle ABC given below. Show construction lines

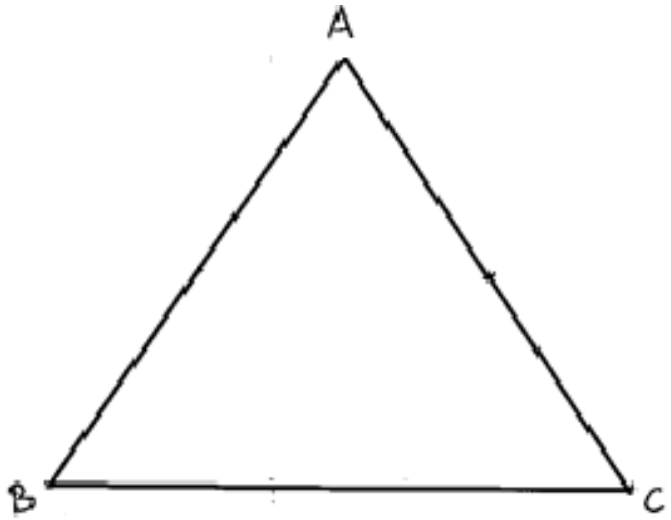

Skill level 2	
2	
1	
0	
NR	

c. List the different types of lines you use in bisecting the angle ABC in b.

i. _____

ii. _____

Skill level 2	
2	
1	
0	
NR	

d. Construct a circle to neatly touch the apex of the three corners of the triangle ABC given below.

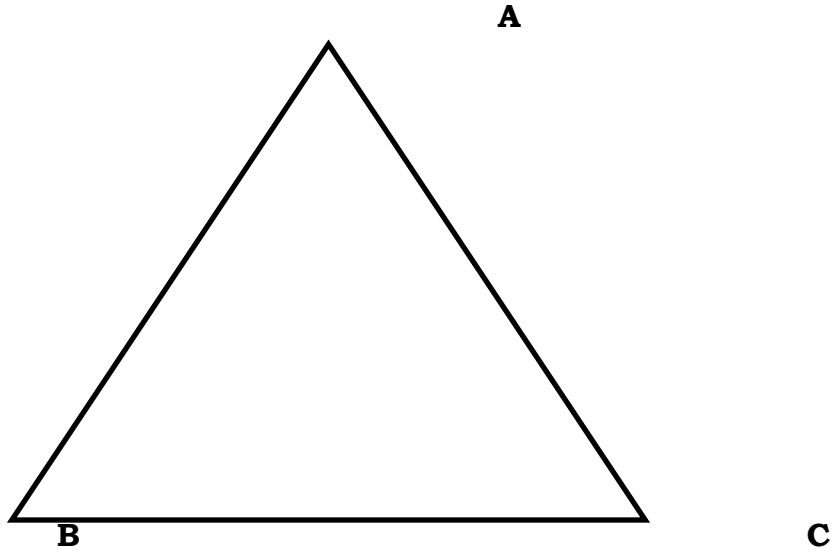

Skill level 3	
3	
2	
1	
0	
NR	

e. Construct **ONE** complete turn of a left-handed square section spring with 40 mm outside diameter, a 60 mm pitch and made from 5 mm square bar.

Skill level 4	
4	
3	
2	
1	
0	
NR	

4. **Development**

Study the given Oblique Square Pyramid OABCD and answer the following questions.

a. Find the true length of the given sides of the Square Pyramid.

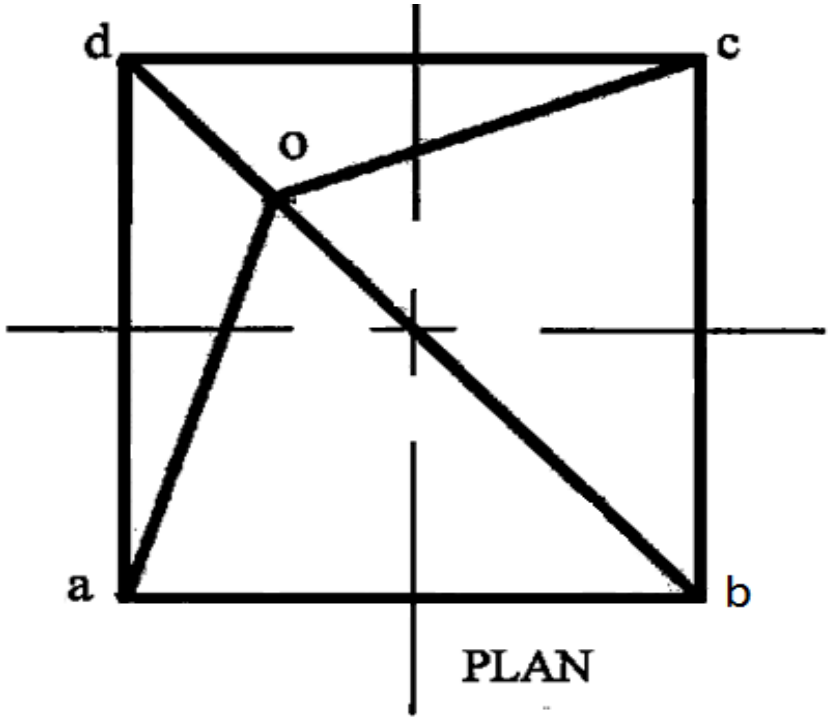

i) True Line **oa** = _____ mm

ii) True Line **oc** = _____ mm

iii) True Line **ad** = _____ mm

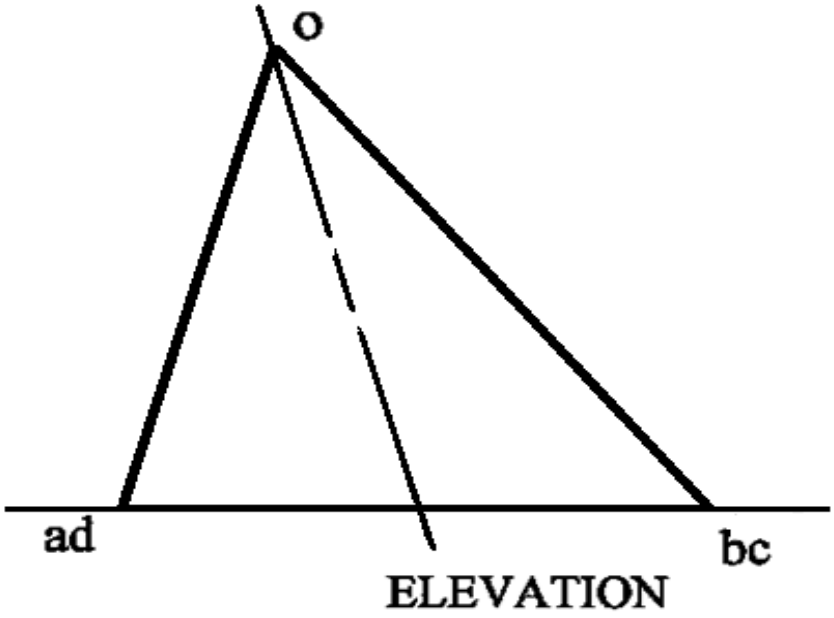

Skill level 3	
3	
2	
1	
0	
NR	

b. Draw the development of the given Oblique Pyramid OABCD

Skill level 4	
4	
3	
2	
1	
0	
NR	

c. Describe the types of lines you used in your drawing in part b on page 70.

Skill level 2	
2	
1	
0	
NR	

5. **Vector Diagrams & Forces:**

a. Describe the following terms.

i. Graphical resolution of forces

Skill level 2	
2	
1	
0	
NR	

ii. Funicular Polygon

Skill level 2	
2	
1	
0	
NR	

b. Determine the resultant force, point of application and equilibrium force of the given co-planar and non-concurrent force system.

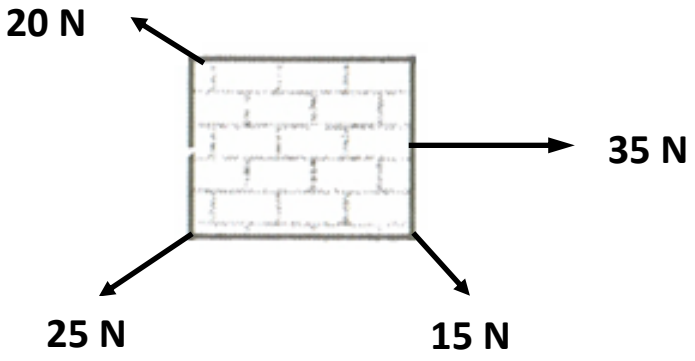

Skill level 3	
3	
2	
1	
0	
NR	

c. Given below is the Space diagram of parallel forces acting on a beam. Use the Link or Funicular and Force or Load line with Polar diagram to determine the:

i. Position of the resultant

ii. Reaction at the supports RL and RR

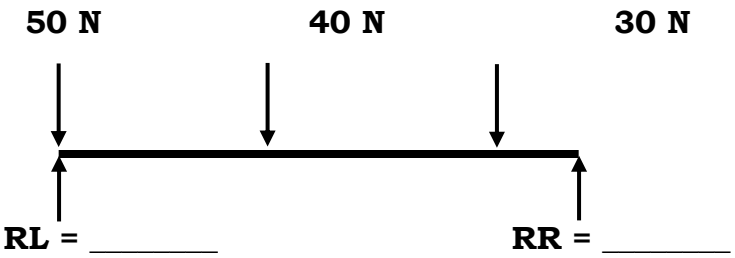

Scale: _____

Skill level 3	
3	
2	
1	
0	
NR	

Skill level 3	
3	
2	
1	
0	
NR	

6. **True Shape & Angle, Orthographic and Assembly Drawing**

a. Projection of the triangle ABC onto the horizontal and vertical planes is given below. Use any method of your choice to determine:

i. the true shape of triangle ABC

ii. the true angle of inclination.

Skill level 3	
3	
2	
1	
0	
NR	

Skill level 3	
3	
2	
1	
0	
NR	

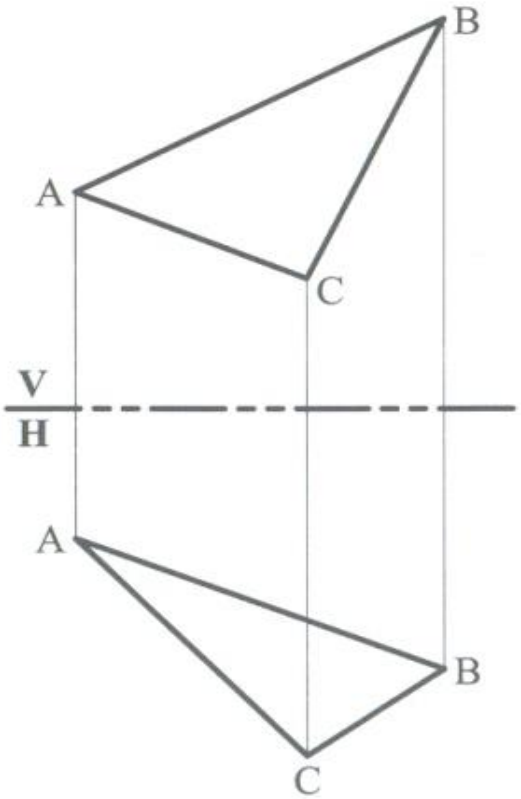

b. List **TWO** (2) different types of Pictorial drawings

i. _____

ii. _____

Skill level 2	
2	
1	
0	
NR	

c. Detail of the component parts of a Bushed Roller Block are given below. Draw, with hidden details, the following views in **Third Angle Projection**:

i. A front view from B and a side view from A

Use any scale of your choice, give 4 main dimensions, and identify the drawing

ii. If you draw the Bushed Roller Block in a **2 : 1** scale. Identify the total height of the scaled diagram. _____

Skill level 4	
4	
3	
2	
1	
0	
NR	

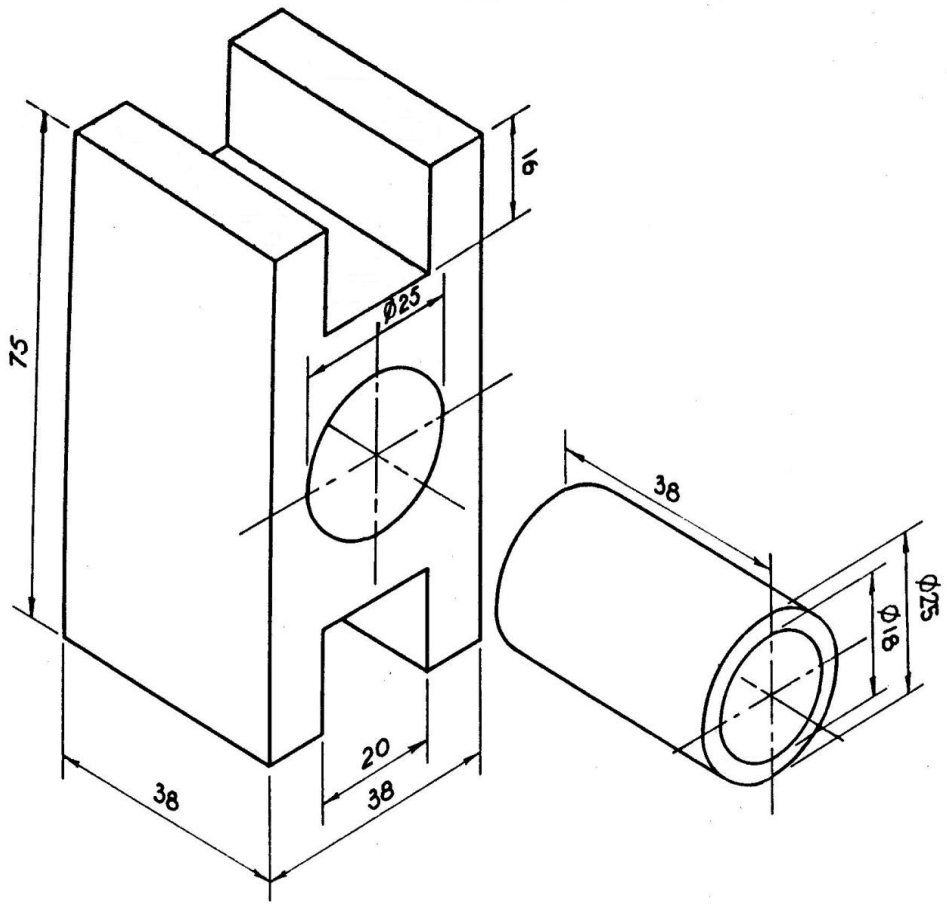

Bushed Roller Block

Skill level 1	
1	
0	
NR	

DO QUESTION BUSHED ROLLER BLOCK IN THIS PAGE